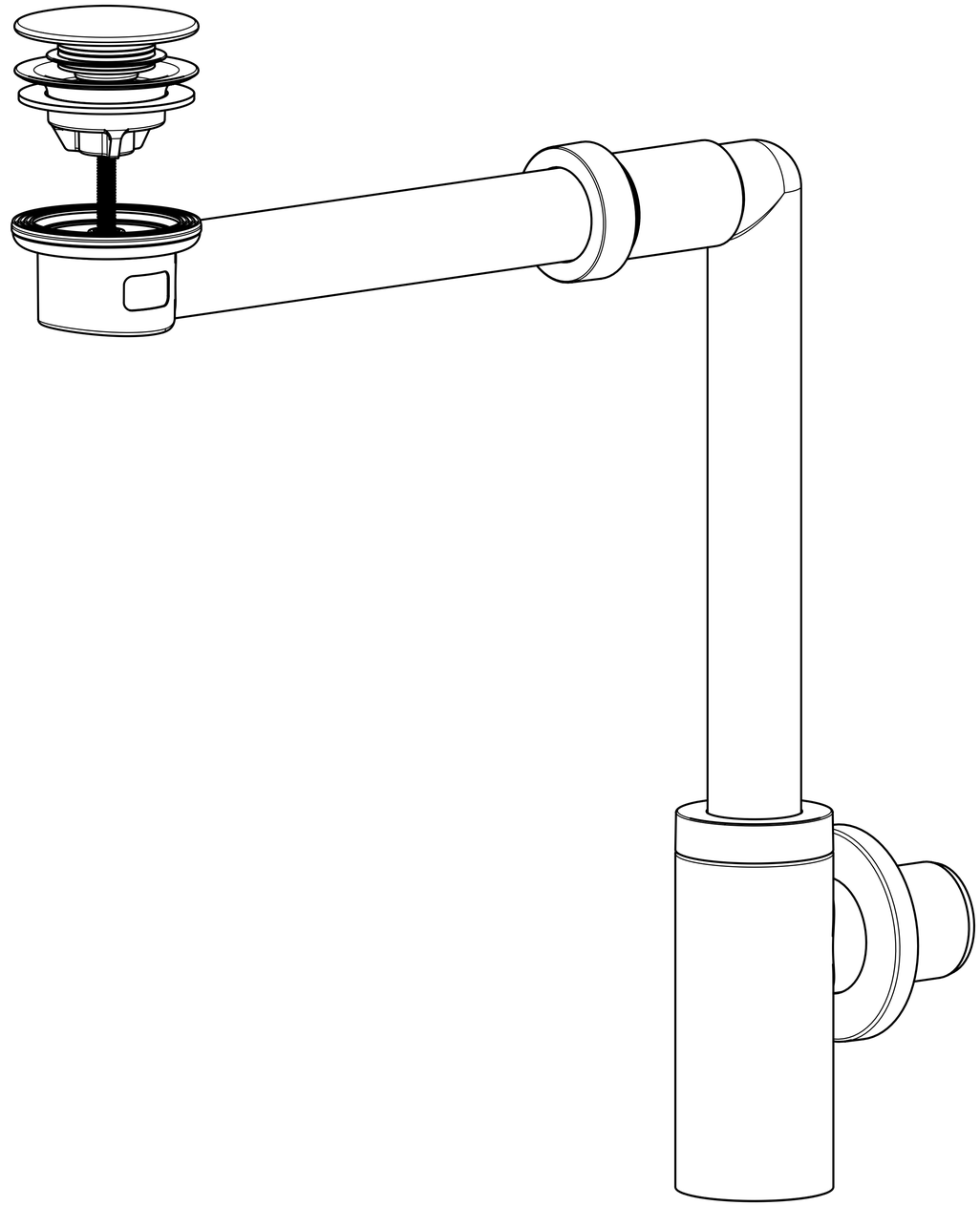

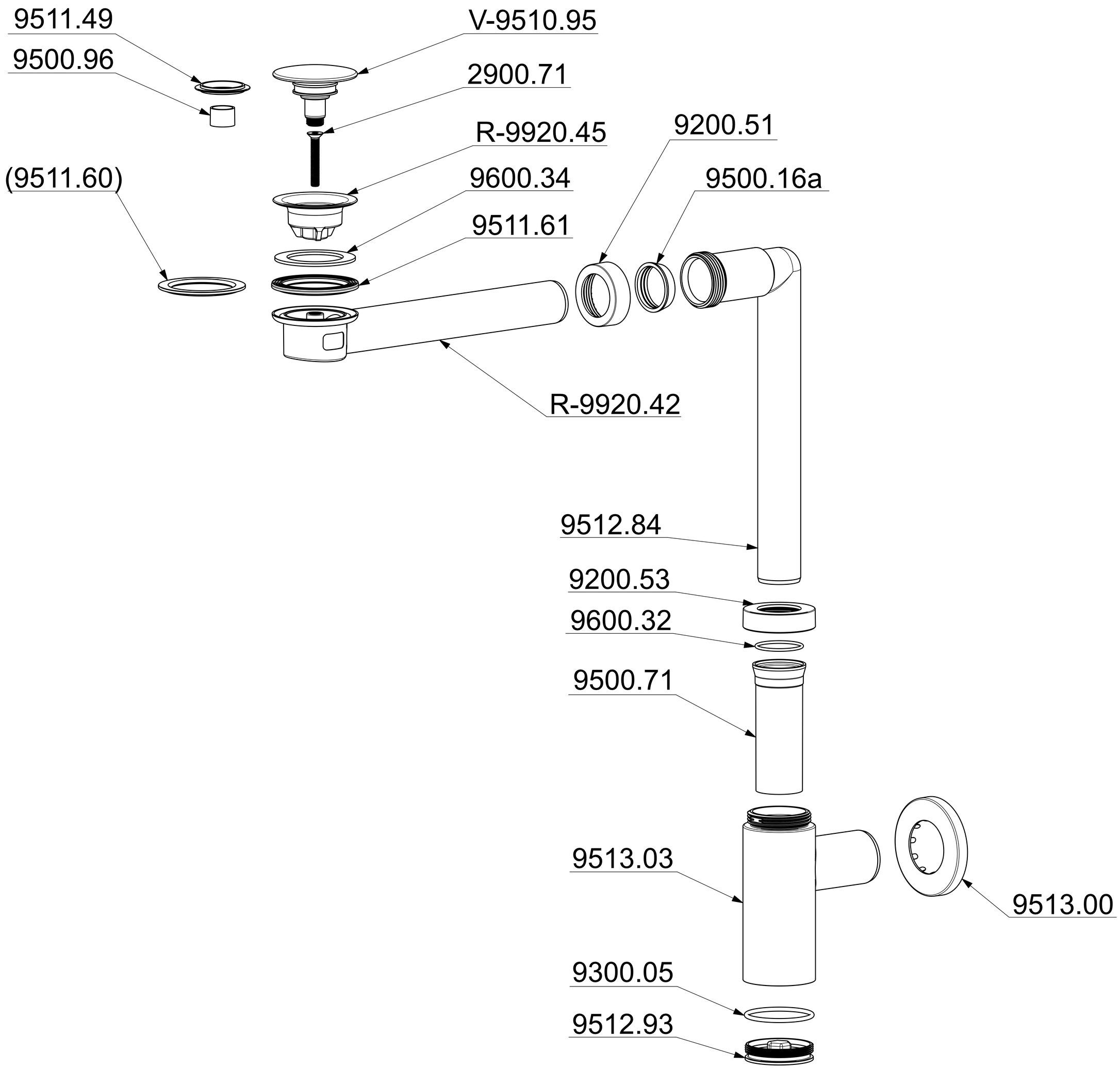
9511.49
9500.96
V-9510.95
2900.71
R-9920.45
9200.51
(9511.60)
9600.34
9500.16a
9511.61
R-9920.42
9512.84
9200.53
9600.32
9500.71
9513.03
9513.00
9300.05
9512.93

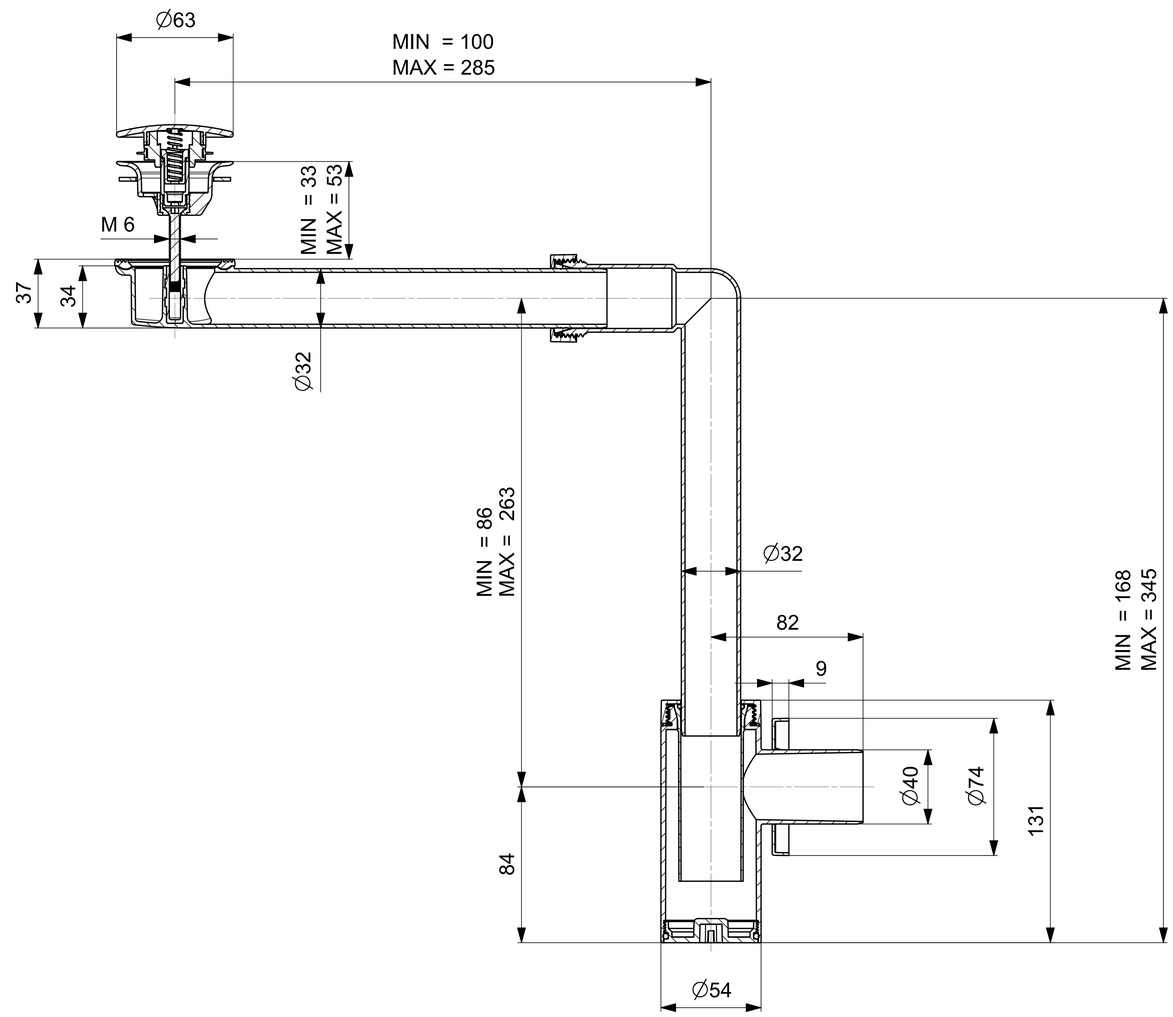
∅63
MIN = 100
MAX = 285
M 6
MIN = 33
MAX = 53
37
34
∅32
MIN = 86
MAX = 263
∅32
82
9
MIN = 168
MAX = 345
∅40
∅74
131
84
∅54

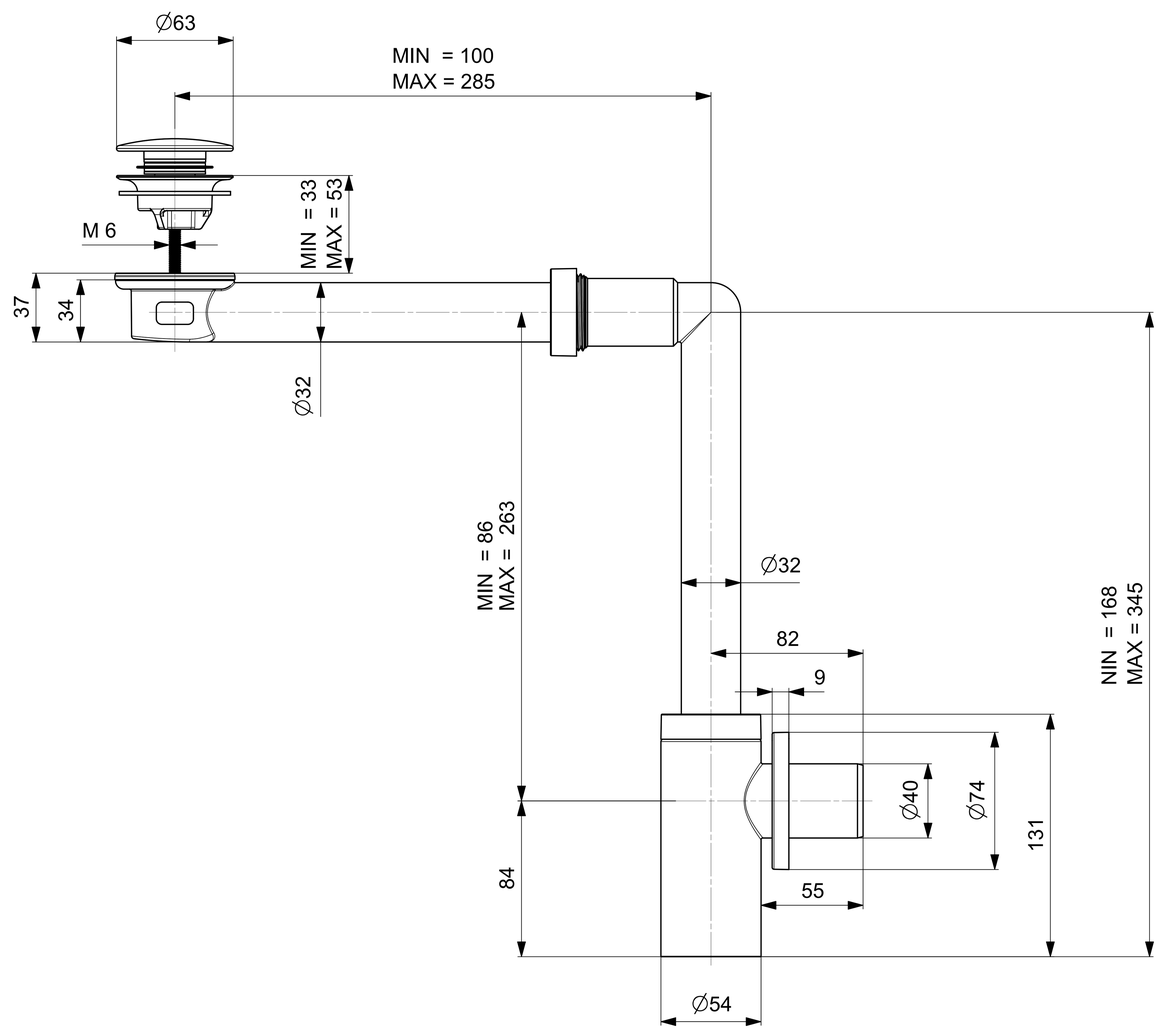
∅63
MIN = 100
MAX = 285
M 6
MIN = 33
MAX = 53
37
34
∅32
MIN = 86
MAX = 263
∅32
82
9
NIN = 168
MAX = 345
∅40
∅74
131
84
55
∅54

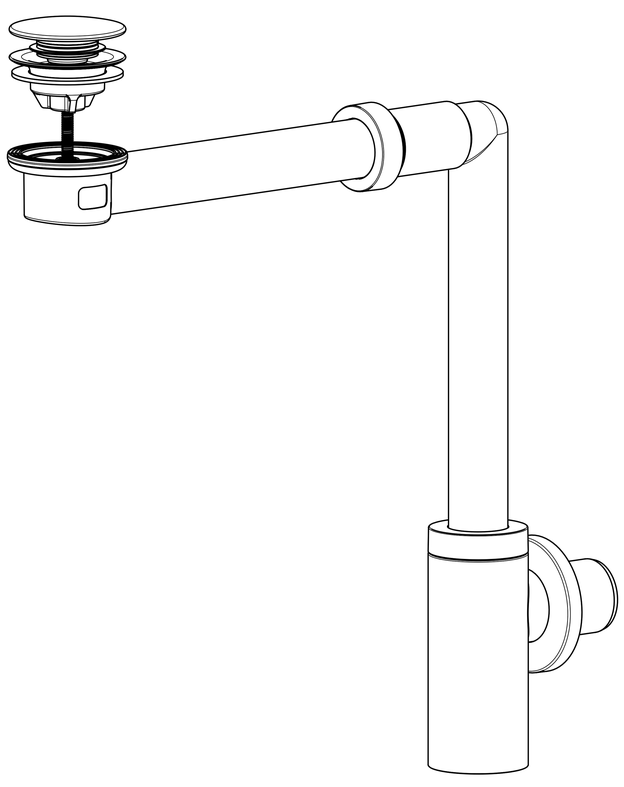

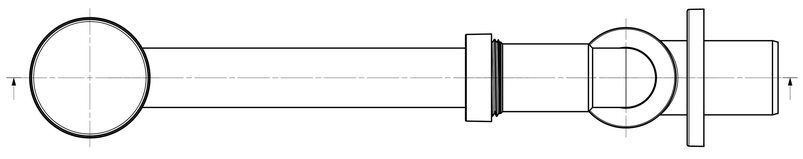

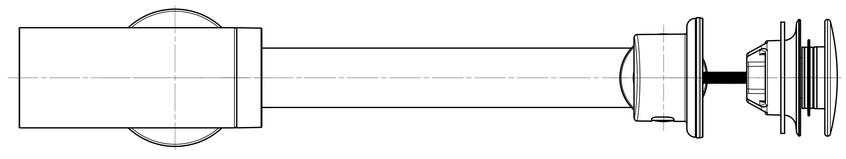

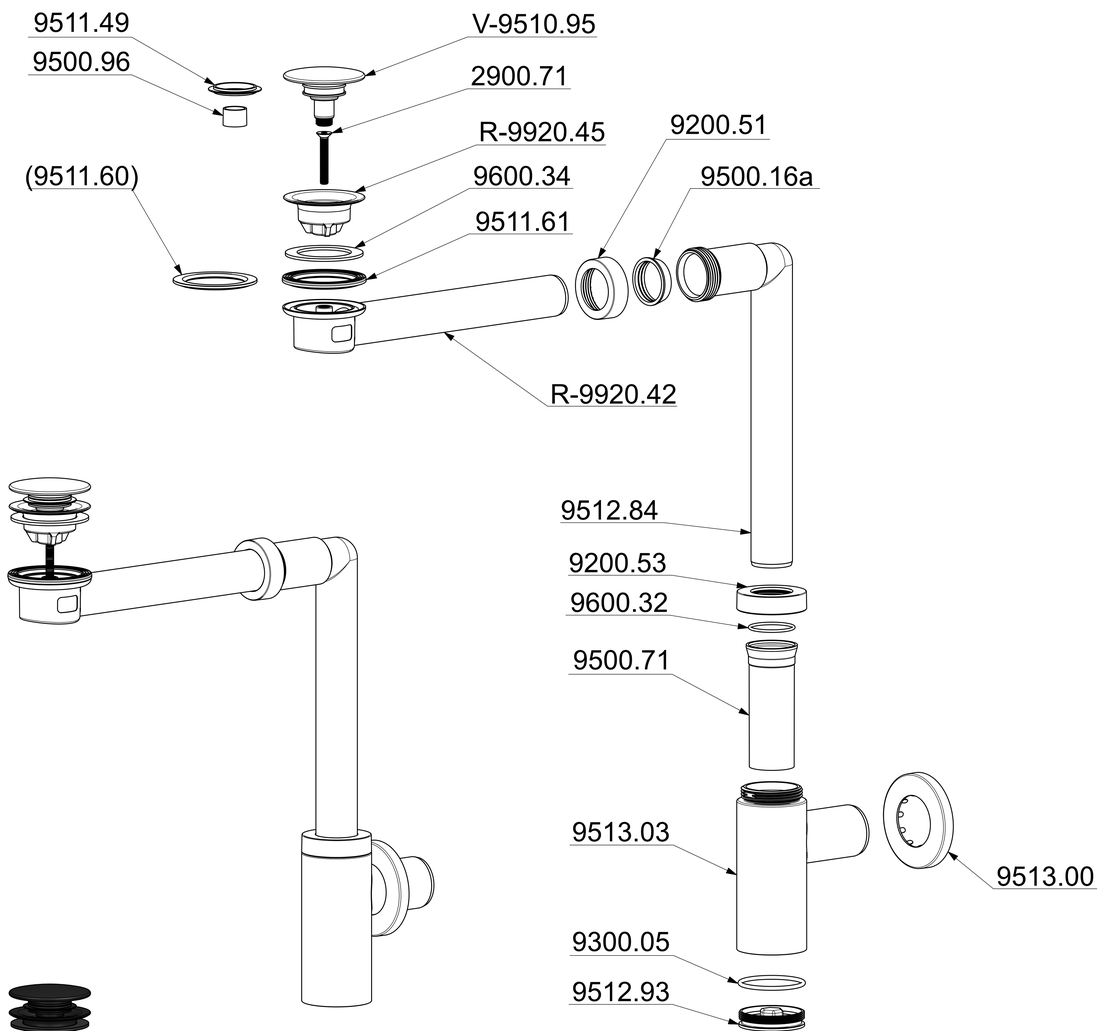
9511.49
9500.96
V-9510.95
2900.71
R-9920.45
9200.51
(9511.60)
9600.34
9500.16a
9511.61
R-9920.42
9512.84
9200.53
9600.32
9500.71
9513.03
9513.00
9300.05
9512.93

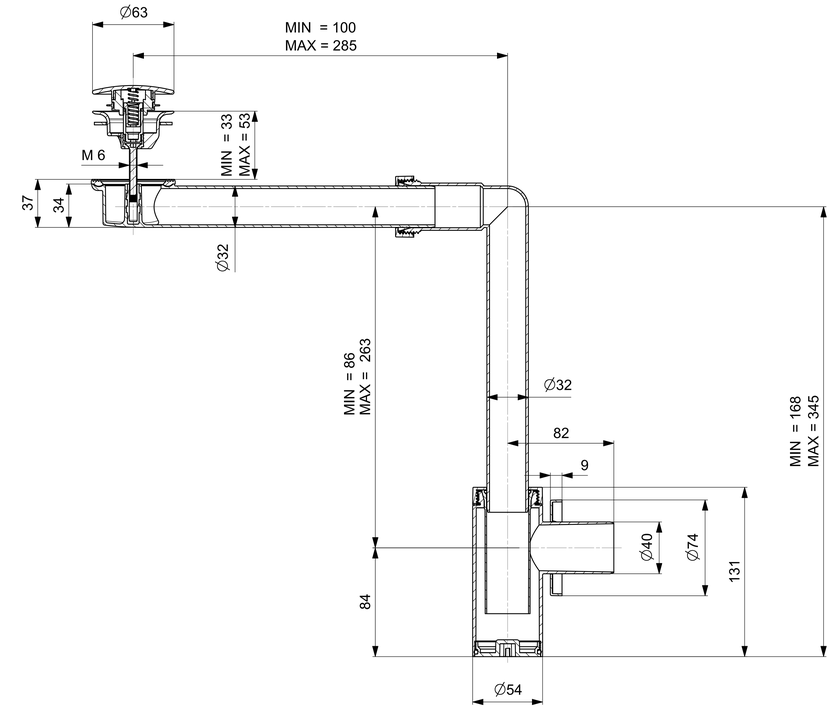
∅63
MIN = 100
MAX = 285
M 6
MIN = 33
MAX = 53
37
34
∅32
MIN = 86
MAX = 263
∅32
82
9
MIN = 168
MAX = 345
∅40
∅74
131
84
∅54

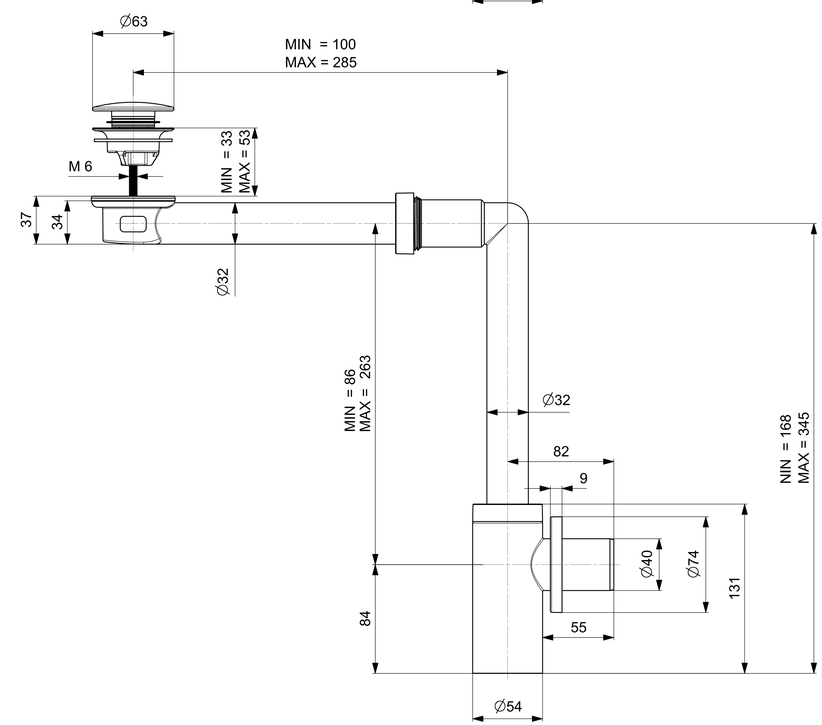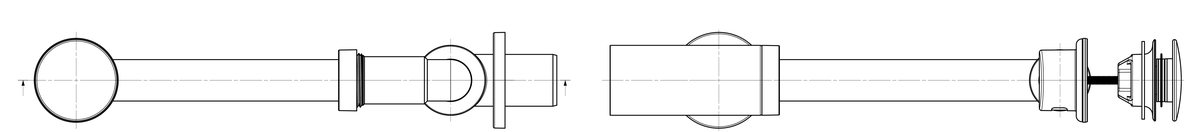
∅63
MIN = 100
MAX = 285
M 6
MIN = 33
MAX = 53
37
34
∅32
MIN = 86
MAX = 263
∅32
82
9
NIN = 168
MAX = 345
∅40
∅74
131
84
55
∅54