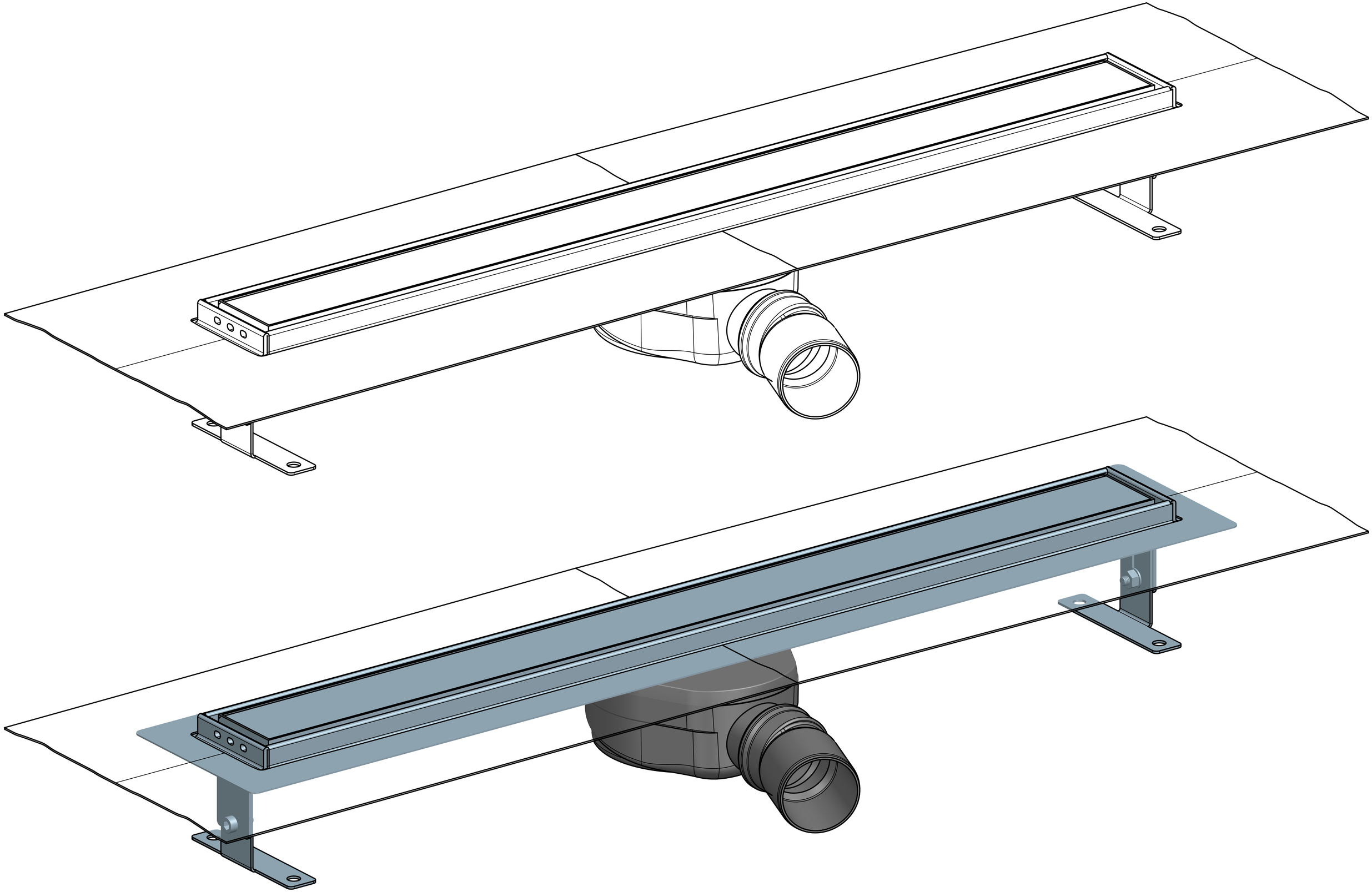

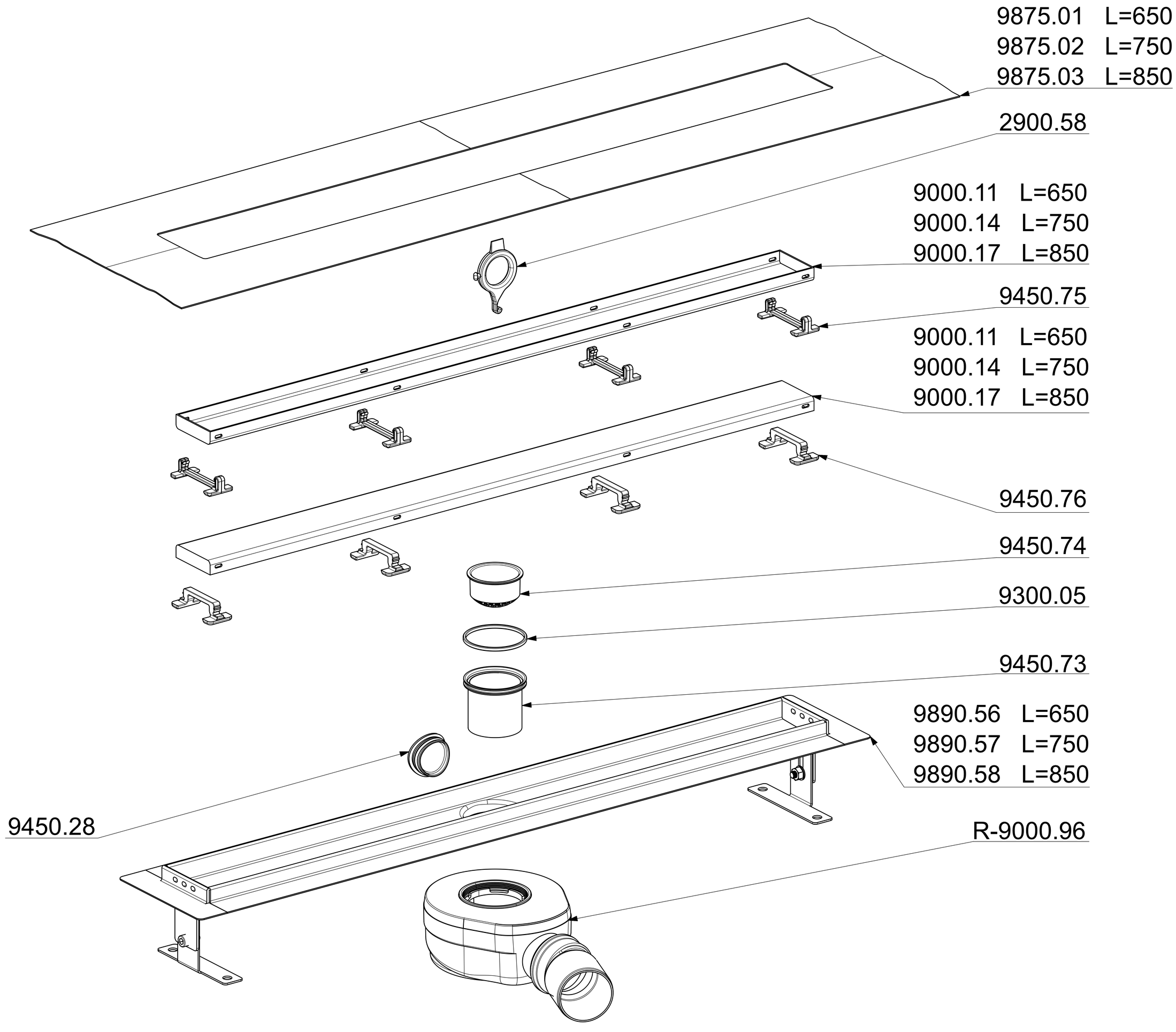
9875.01 L=650
9875.02 L=750
9875.03 L=850
2900.58
9000.11 L=650
9000.14 L=750
9000.17 L=850
9450.75
9000.11 L=650
9000.14 L=750
9000.17 L=850
9450.76
9450.74
9300.05
9450.73
9890.56 L=650
9890.57 L=750
9890.58 L=850
9450.28
R-9000.96

NEREZOVY ZLAB	650	750	850
L1	663	763	863
L2	718	818	918
L3	655	755	855

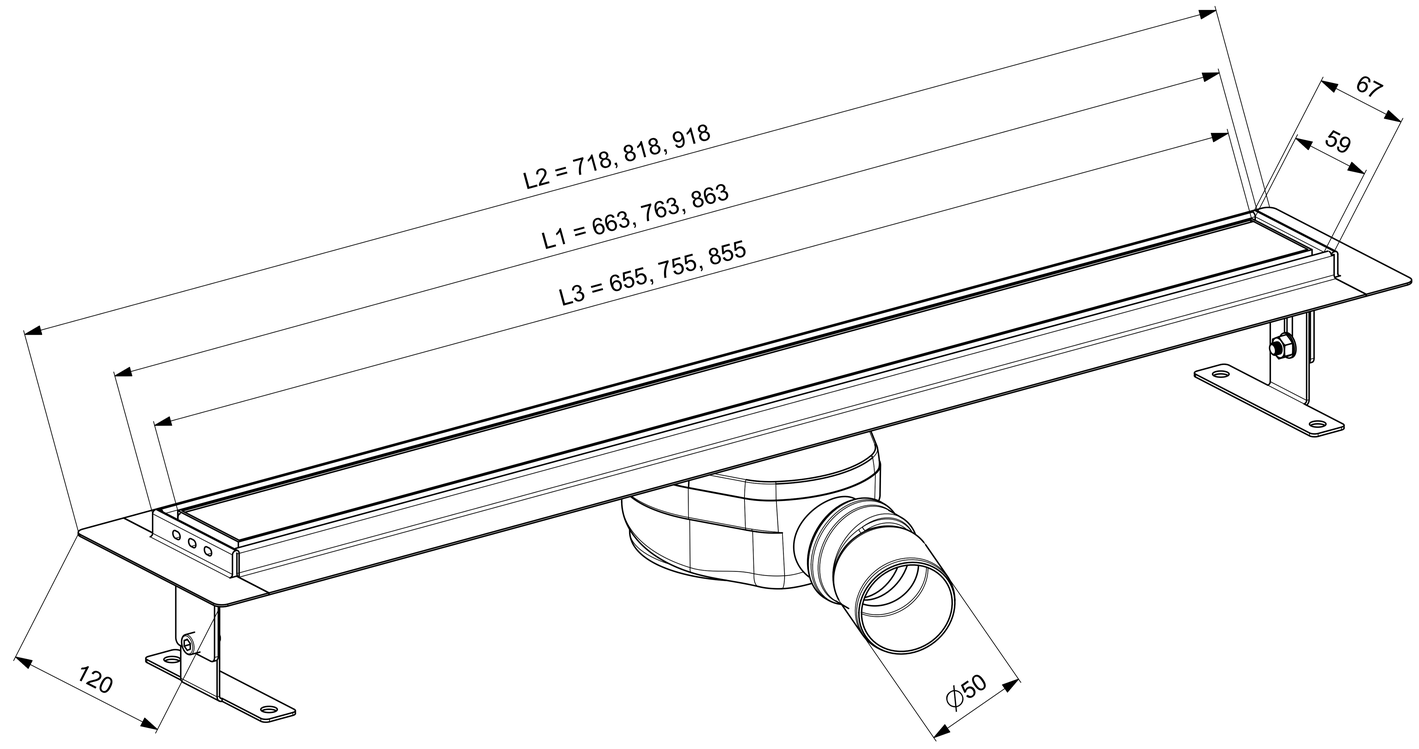

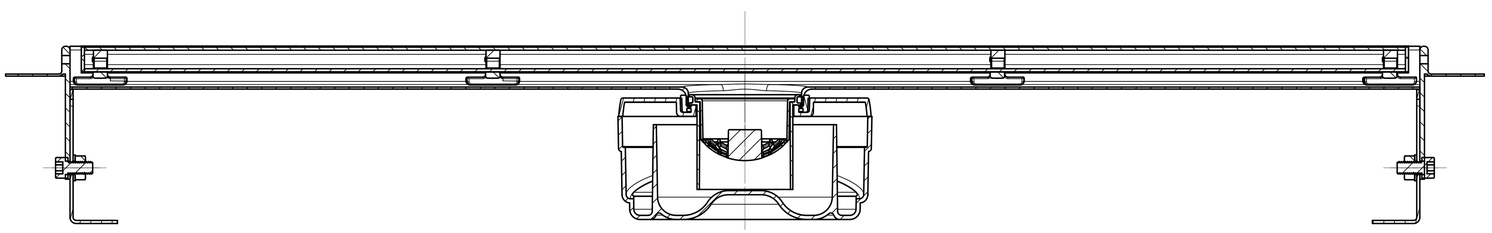

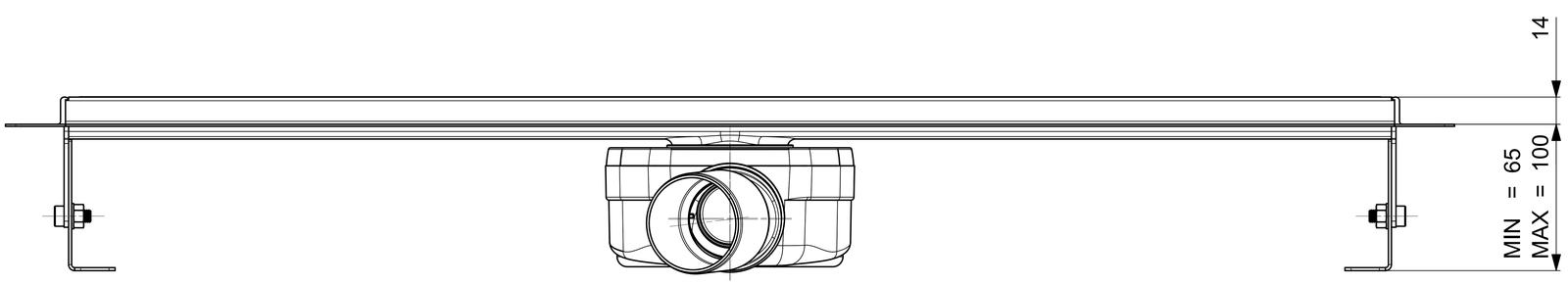

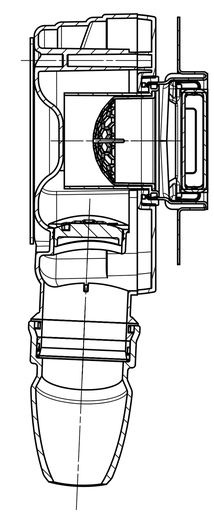

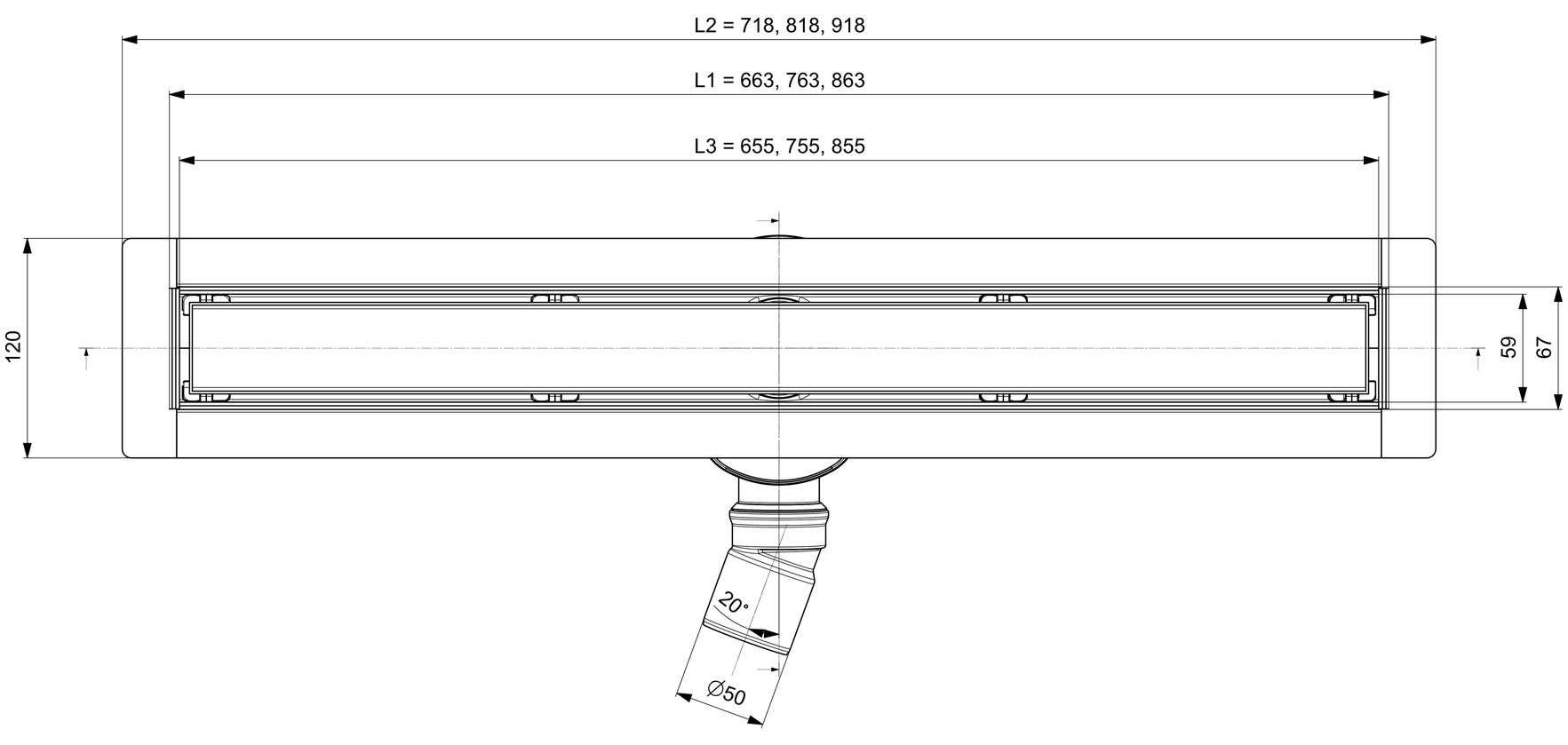

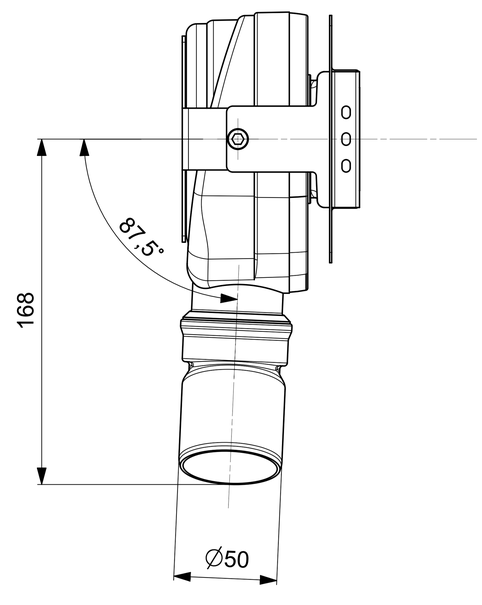
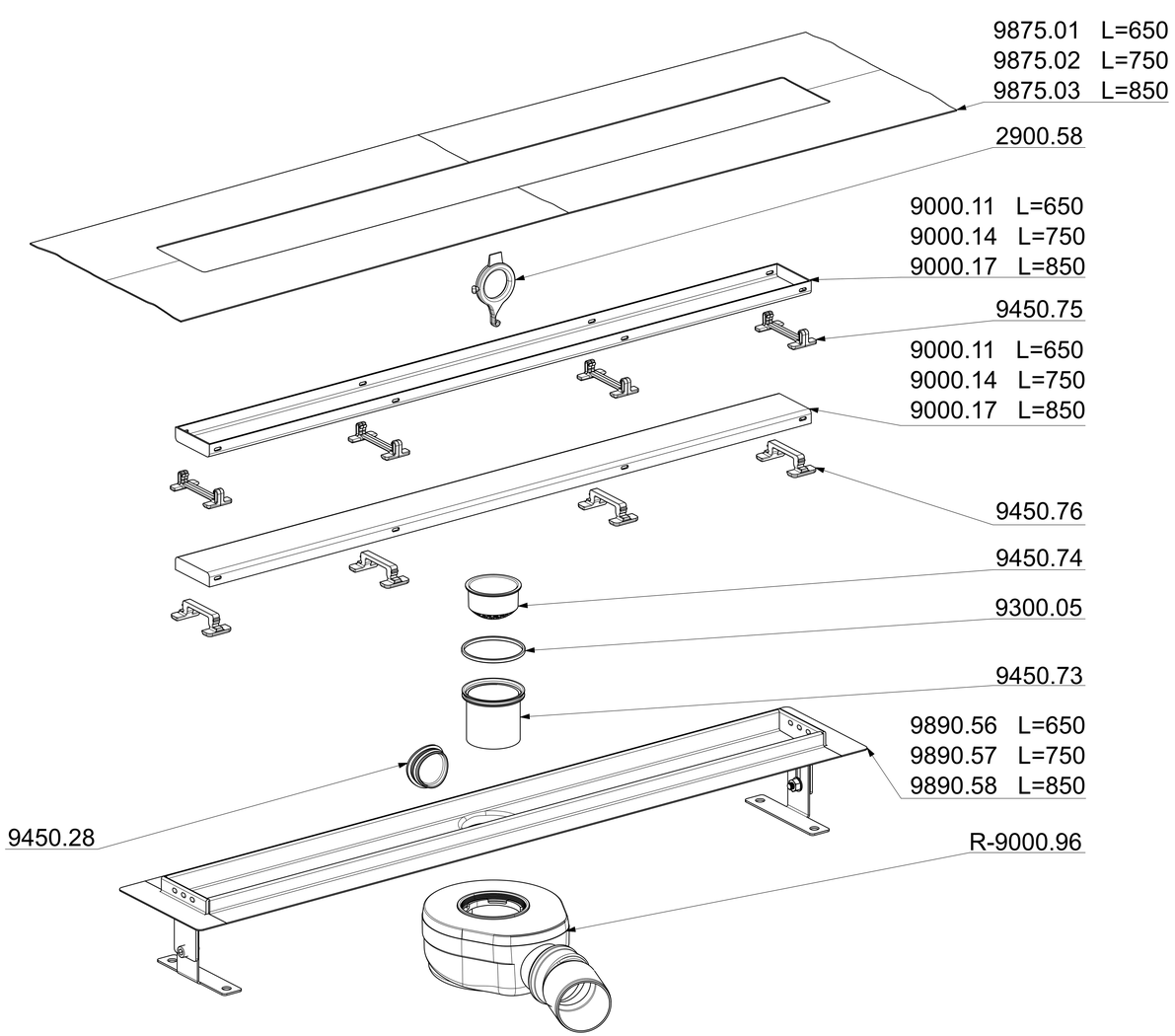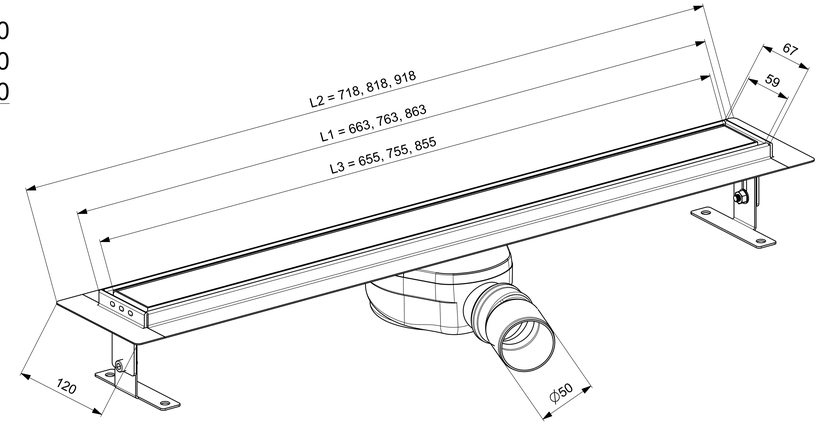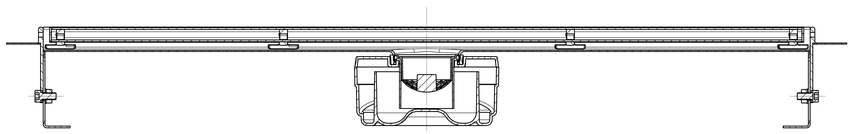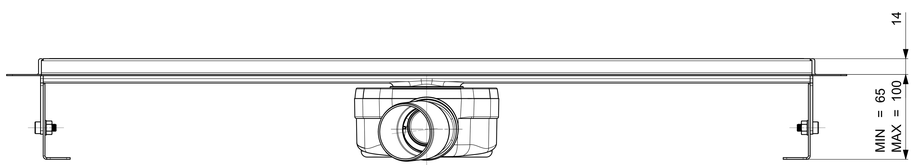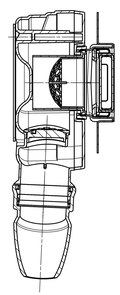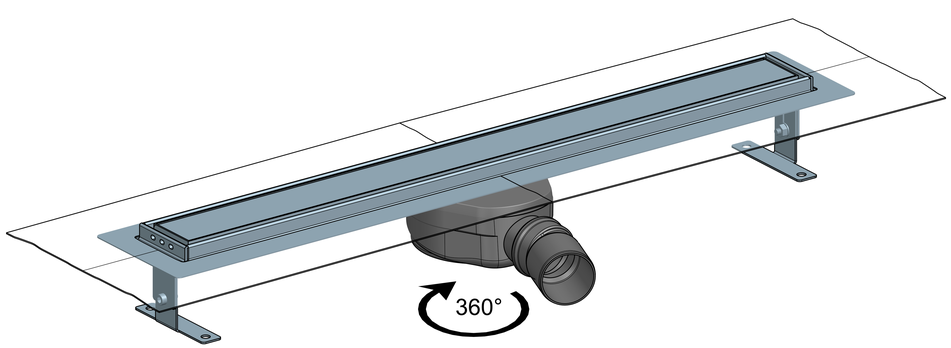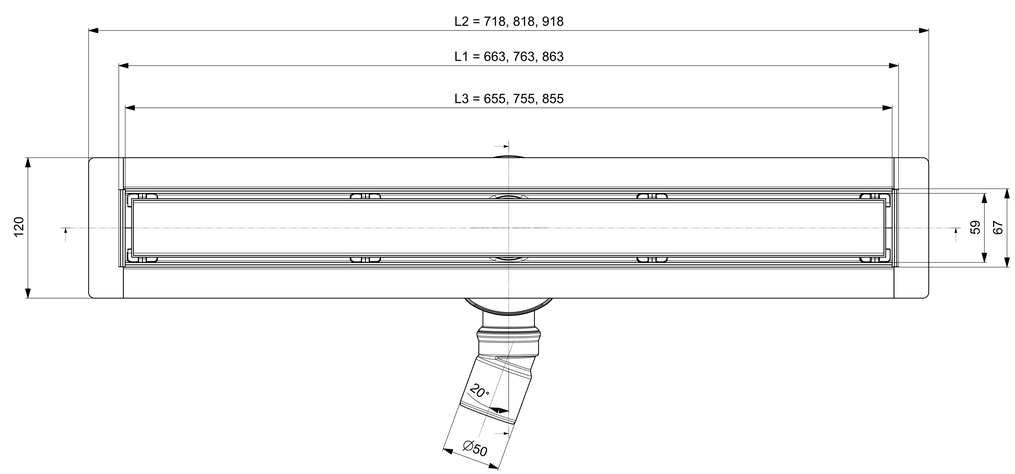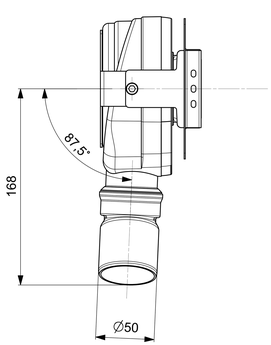
NEREZOVY ZLAB	650	750	850
L1	663	763	863
L2	718	818	918
L3	655	755	855