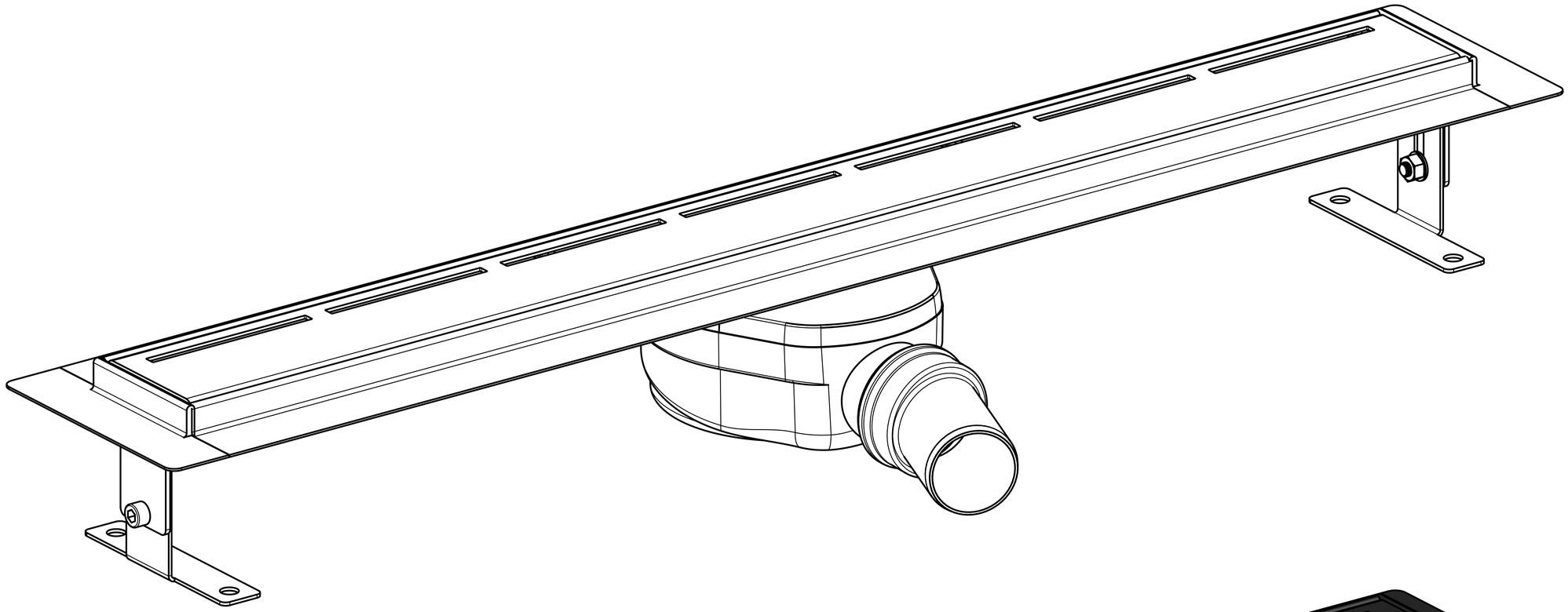

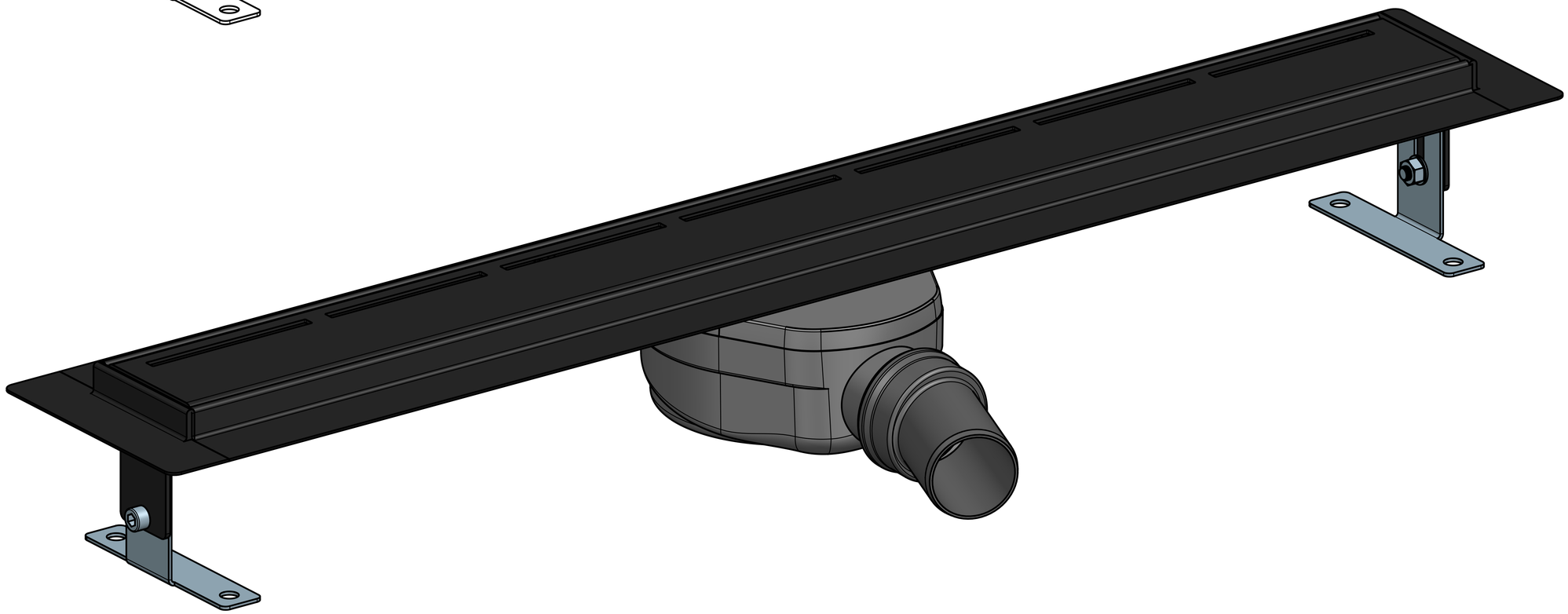

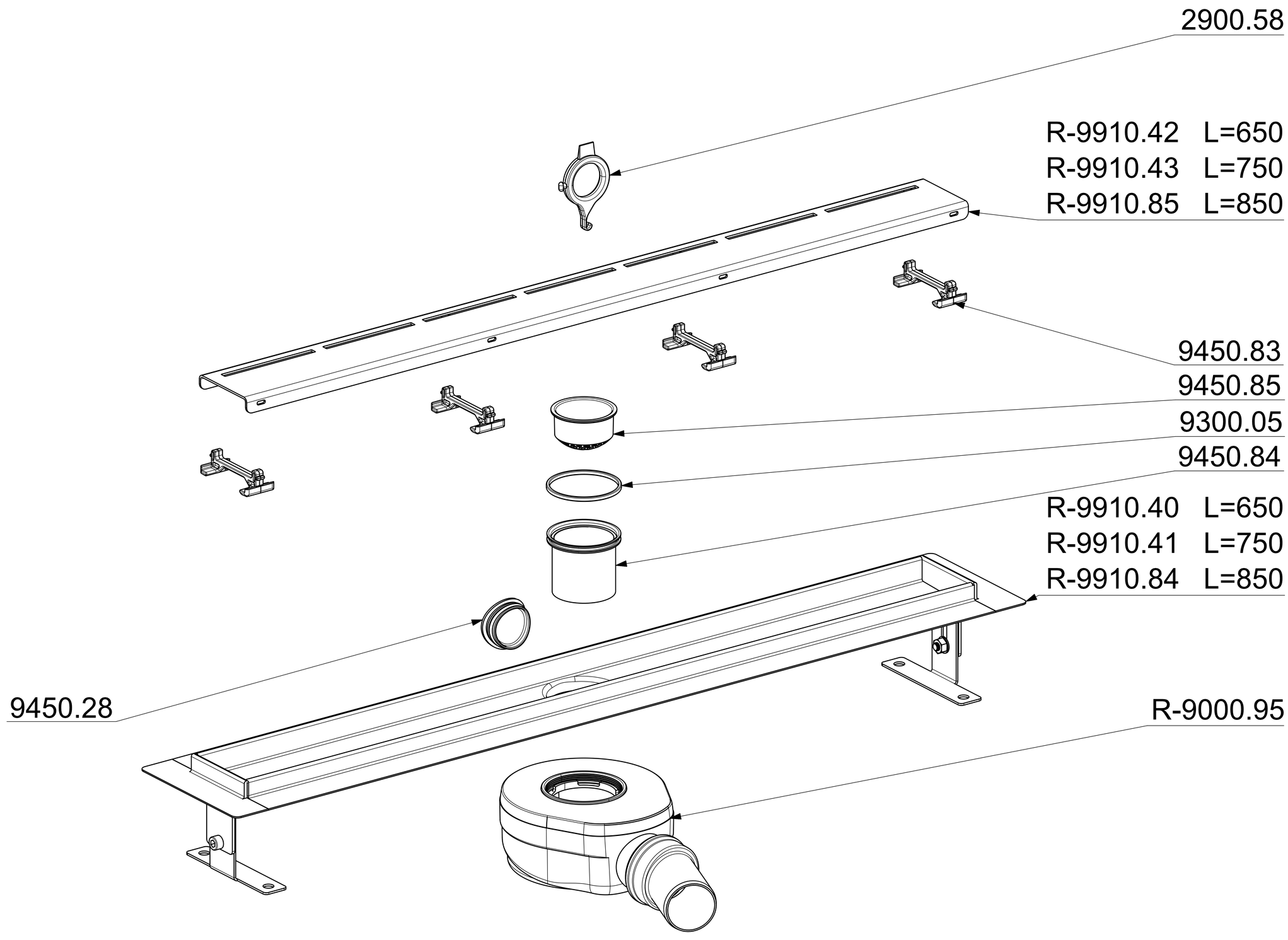
2900.58
R-9910.42 L=650
R-9910.43 L=750
R-9910.85 L=850
9450.83
9450.85
9300.05
9450.84
R-9910.40 L=650
R-9910.41 L=750
R-9910.84 L=850
9450.28
R-9000.95

NEREZOVY ZLAB	650	750	850
L1	663	763	863
L2	718	818	918
L3	655	755	855

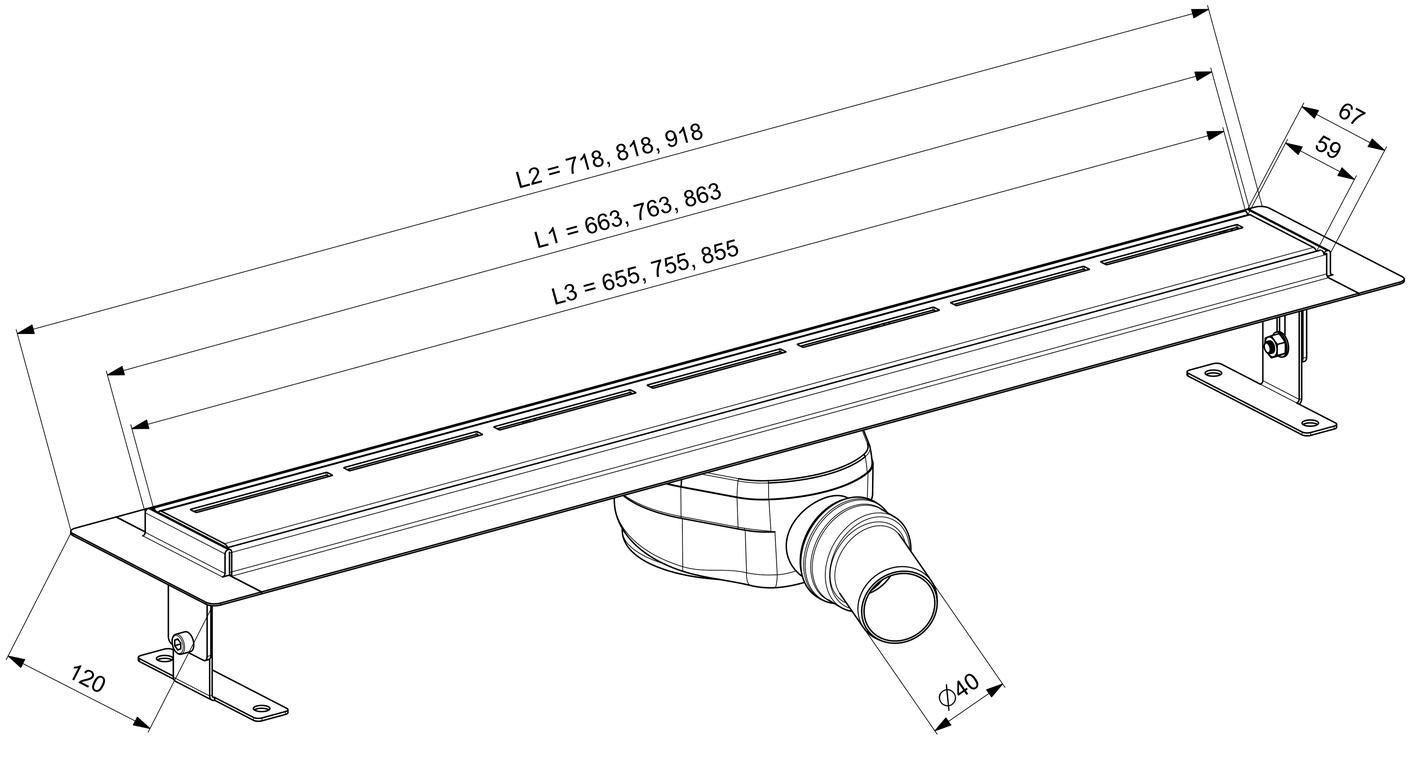

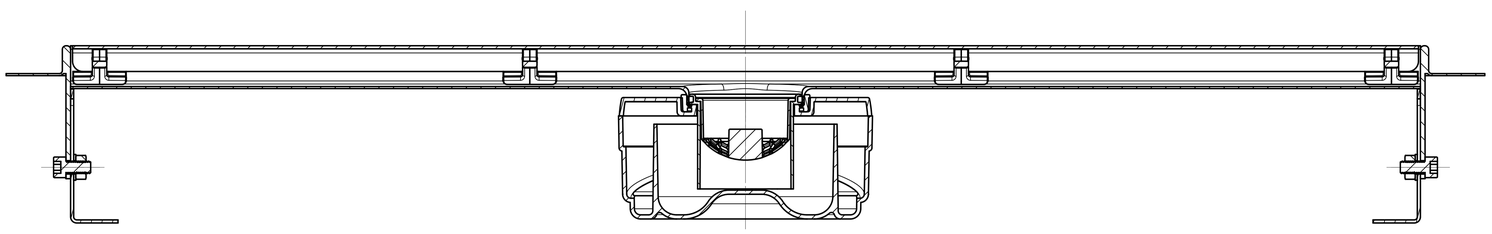

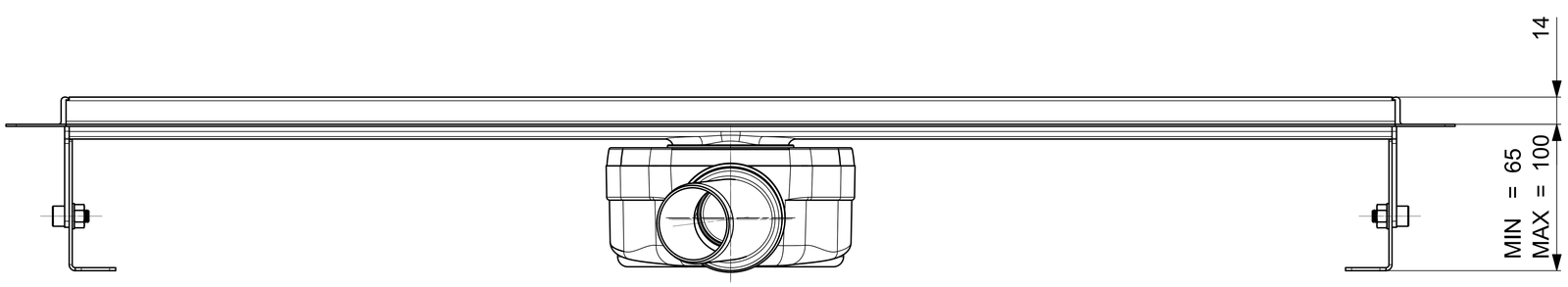

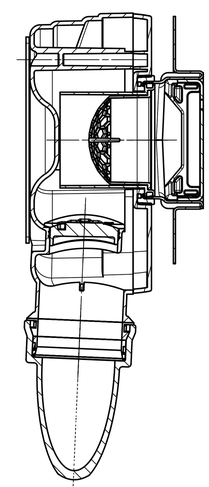

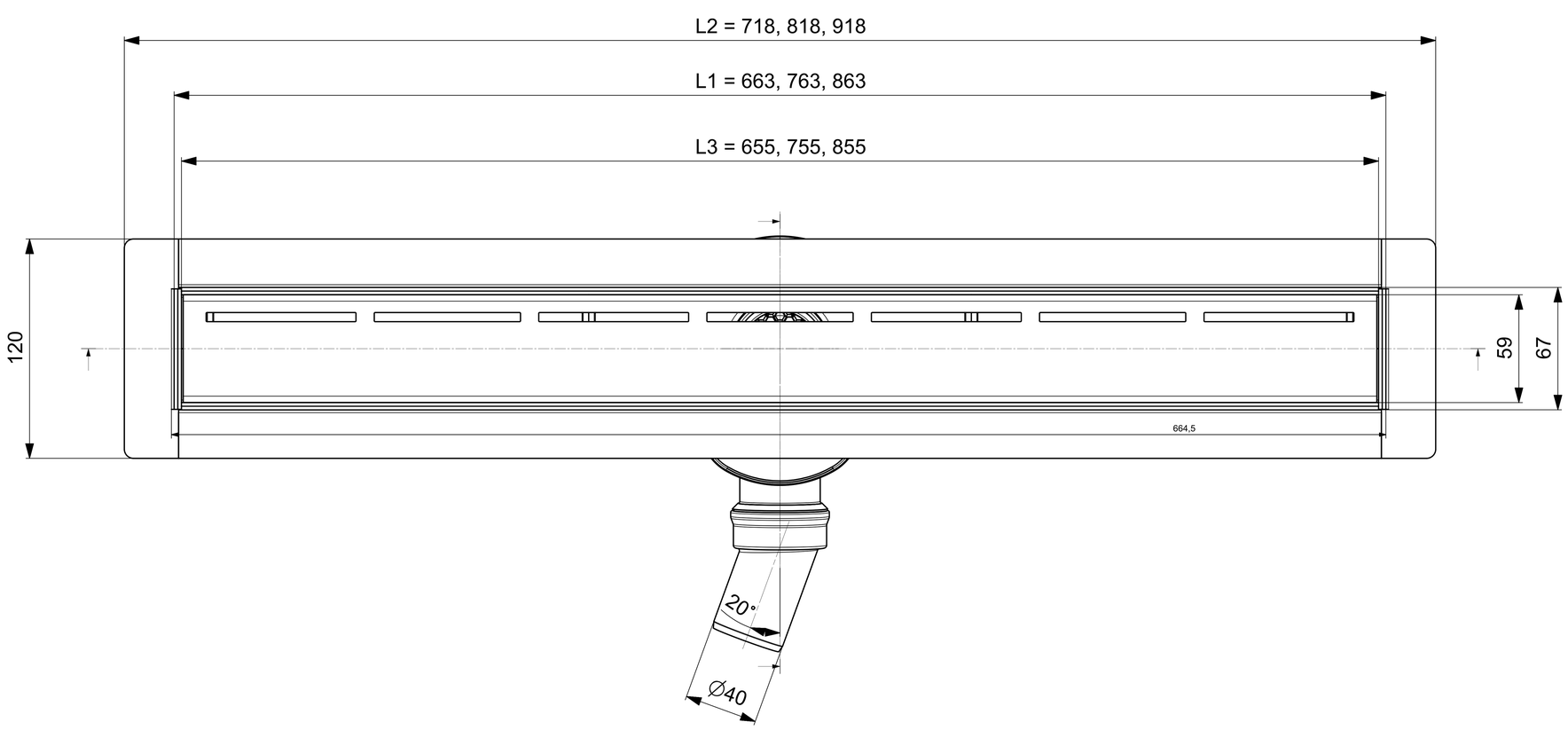

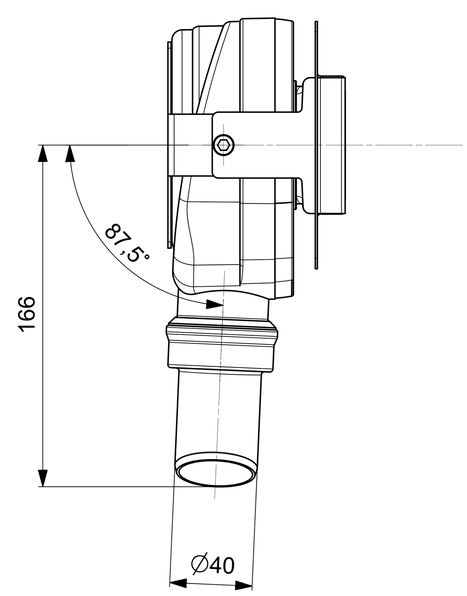
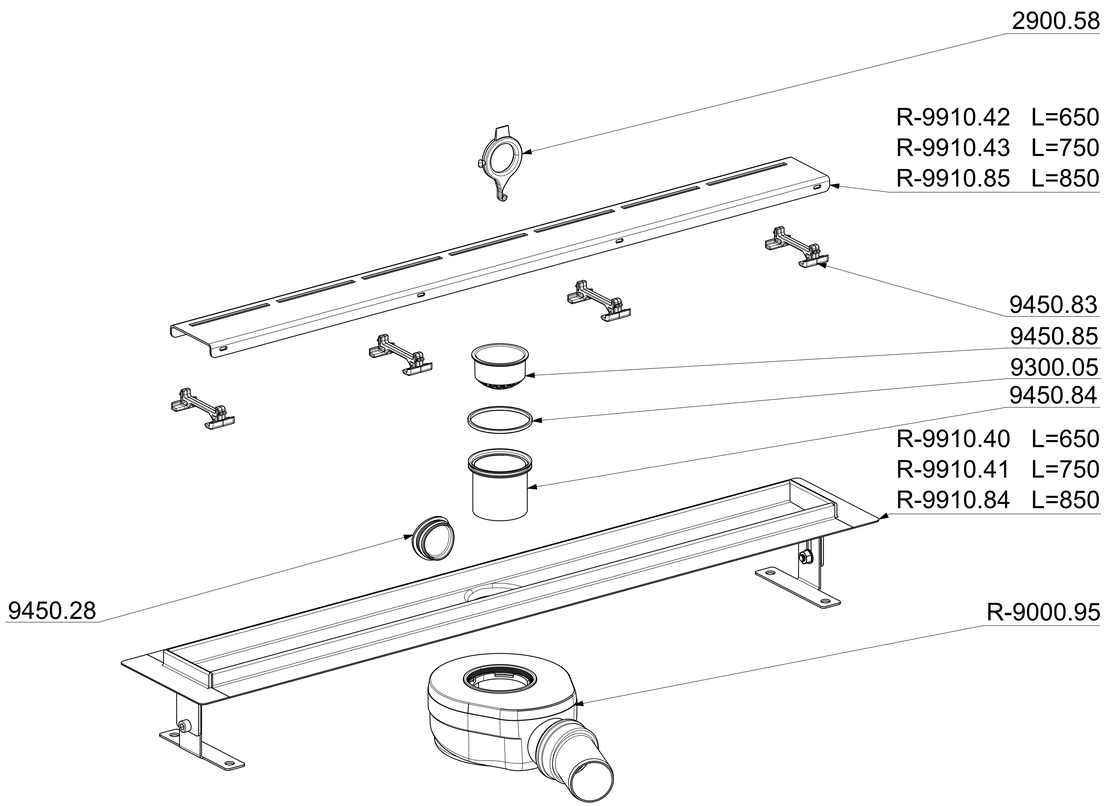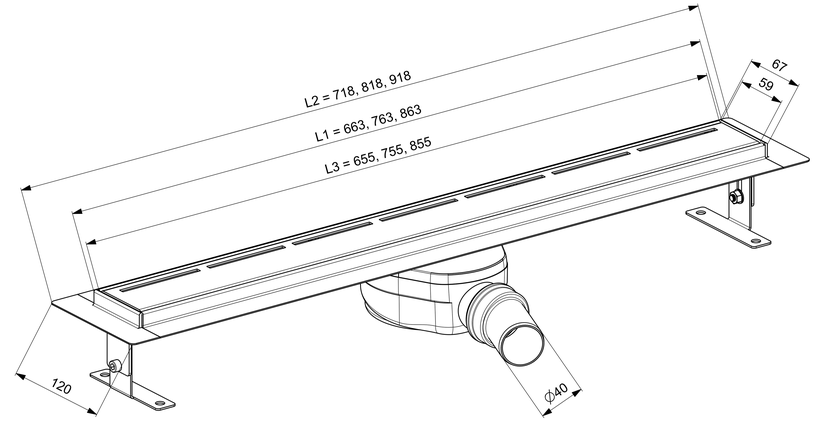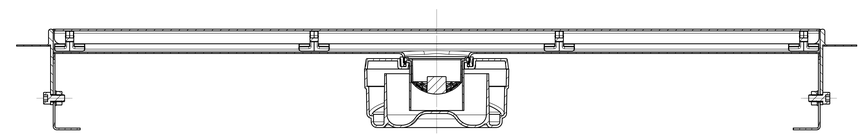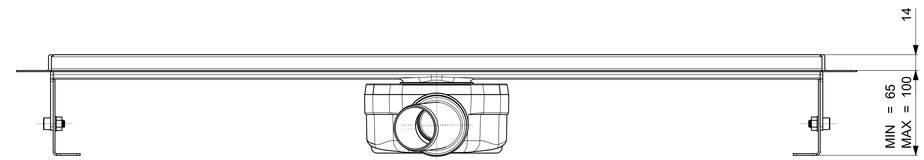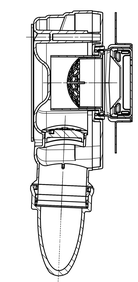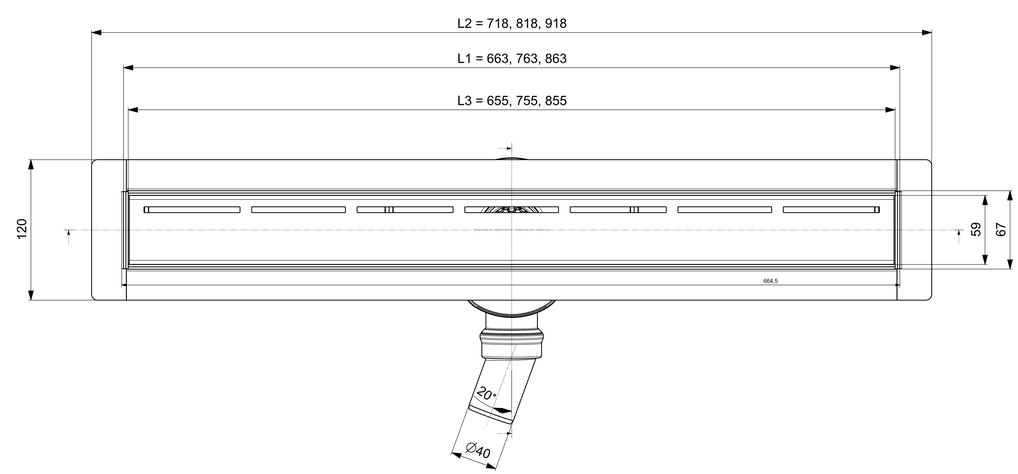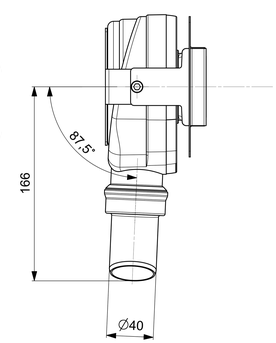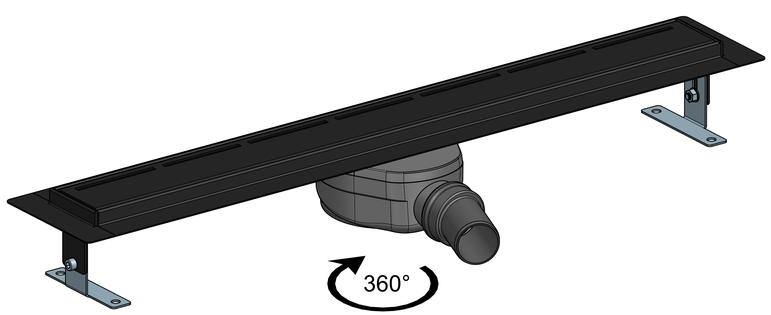
NEREZOVY ZLAB	650	750	850
L1	663	763	863
L2	718	818	918
L3	655	755	855